SAMSUNG CONFIDENTIAL
THIS DOCUMENT CONTAINS CONFIDENTIAL
PROPRIETARY INFORMATION THAT IS
SAMSUNG ELECTRONICS CO'S PROPERTY.
DO NOT DISCLOSE TO OR DUPLICATE FOR OTHERS
EXCEPT AS AUTHORIZED BY SAMSUNG.

SM-M146B REV0.2A

2022.12.23

sheet01 : GSM / WCDMA / LTE / 5G sub6 RF
sheet02 : N78 DRX
sheet03 : APT, TRANCEIVER
sheet04 : SENSORS,CONNECTIVITY
sheet05 : AP(MT6833)
sheet06 : PMIC(Main,IF), KEY, MOTOR, UFS
sheet07 : AUDIO, SD/SIM, SHIELD CAN, IF CON
sheet08 : CAMERA, DISPLAY

SAMSUNG CONFIDENTIAL
THIS DOCUMENT CONTAINS CONFIDENTIAL
AND PROPRIETARY INFORMATION OF
SAMSUNG ELECTRONICS CO'S PROPERTY.
DO NOT DISCLOSE TO OR DUPLICATE FOR OTHERS
EXCEPT AS AUTHORIZED BY SAMSUNG.

RF PART 1

MAIN ANT1
LB TRX

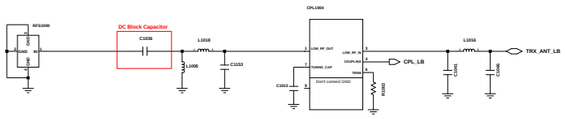

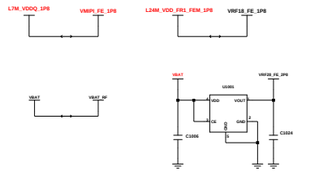

FEMiD VDD LDO

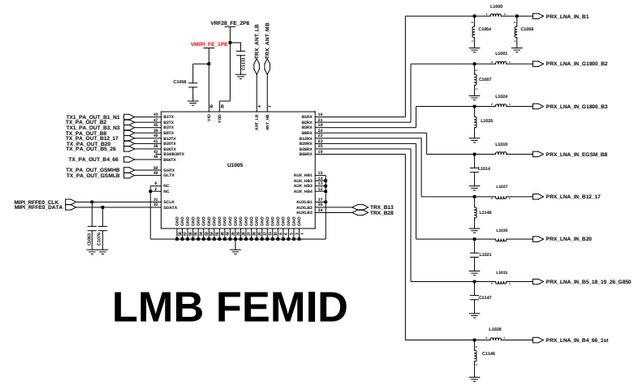

LMB FEMID

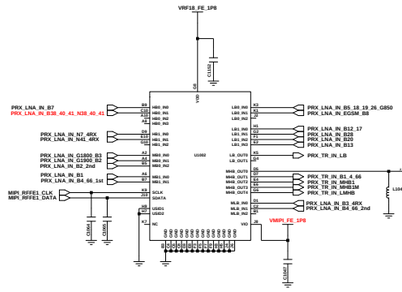

PRX LNA BANK

MAIN ANT2
MB/HB TRX

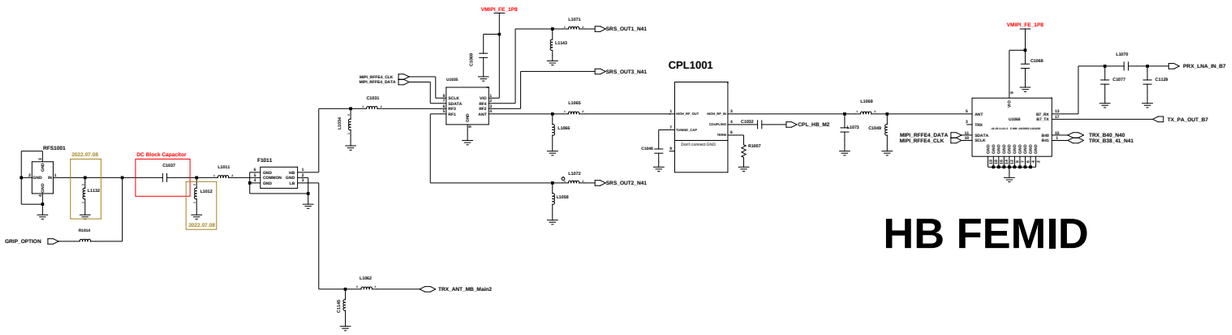

HB FEMID

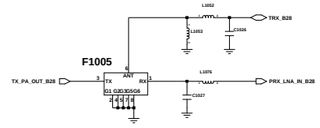

B28_DPX

M14 NC

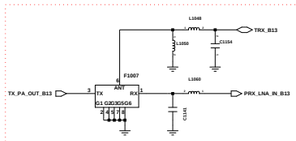

B13 DPX

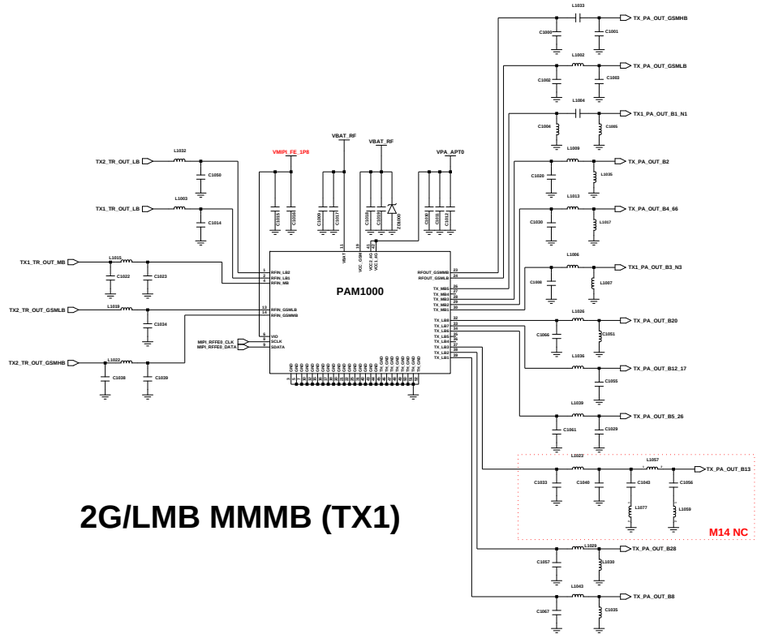

2G/LMB MMMB (TX1)

MAIN ANT3
N1/N3/N66 TRX (for M-M/M-H ENDC)

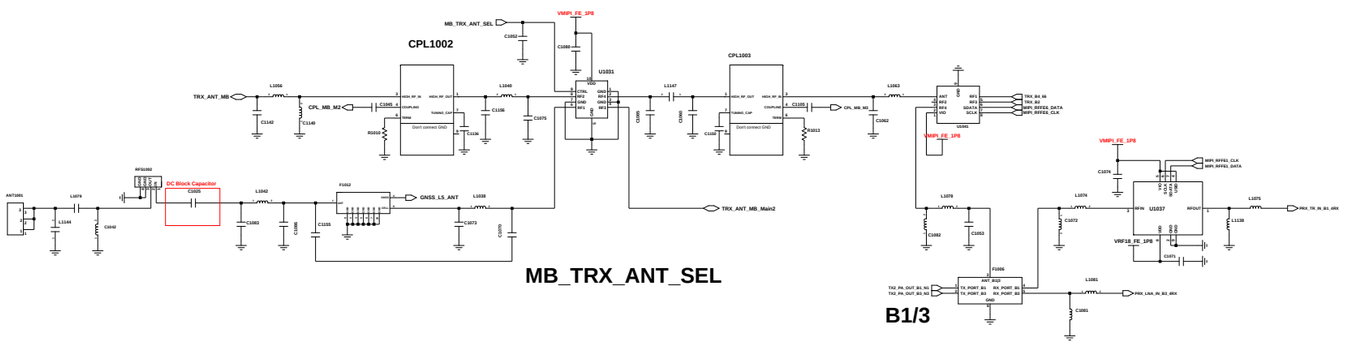

MB_TRX_ANT_SEL

B1/3

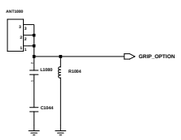

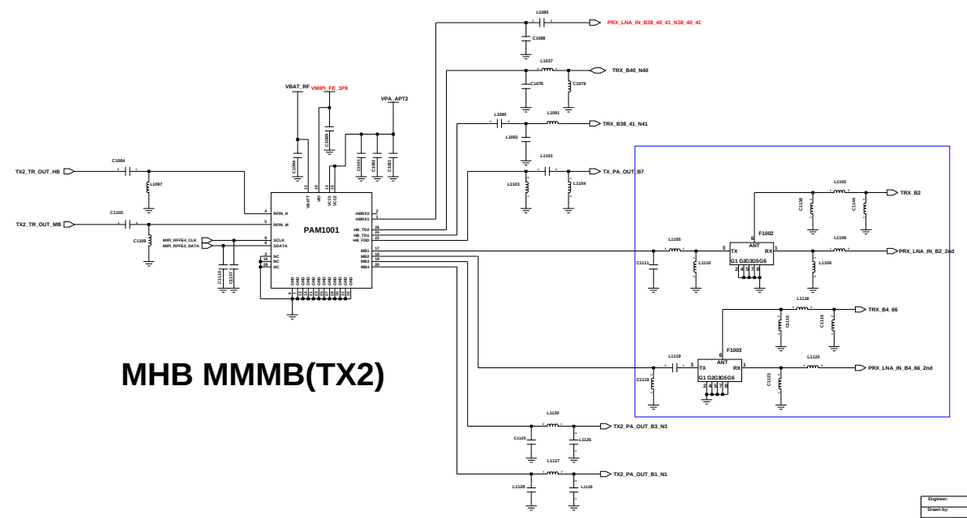

MHB MMMB(TX2)

Engineer:		MAIN	
Drawn by:			
RSD CHK:		TITLE:	Size
DOC CTRL CHK:			
MFG ENGR CHK:			
QA CHK:		RSD	Drawing Number:

Changed by: | Date Changed: | Time Changed: | Page: 1/8

SAMSUNG CONFIDENTIAL
THIS DOCUMENT CONTAINS CONFIDENTIAL
PROPRIETARY INFORMATION THAT IS
SAMSUNG ELECTRONICS CO'S PROPERTY.
DO NOT DISCLOSE TO OR DUPLICATE FOR OTHERS
EXCEPT AS AUTHORIZED BY SAMSUNG.

SUB ANT1

DRX_L/M/H

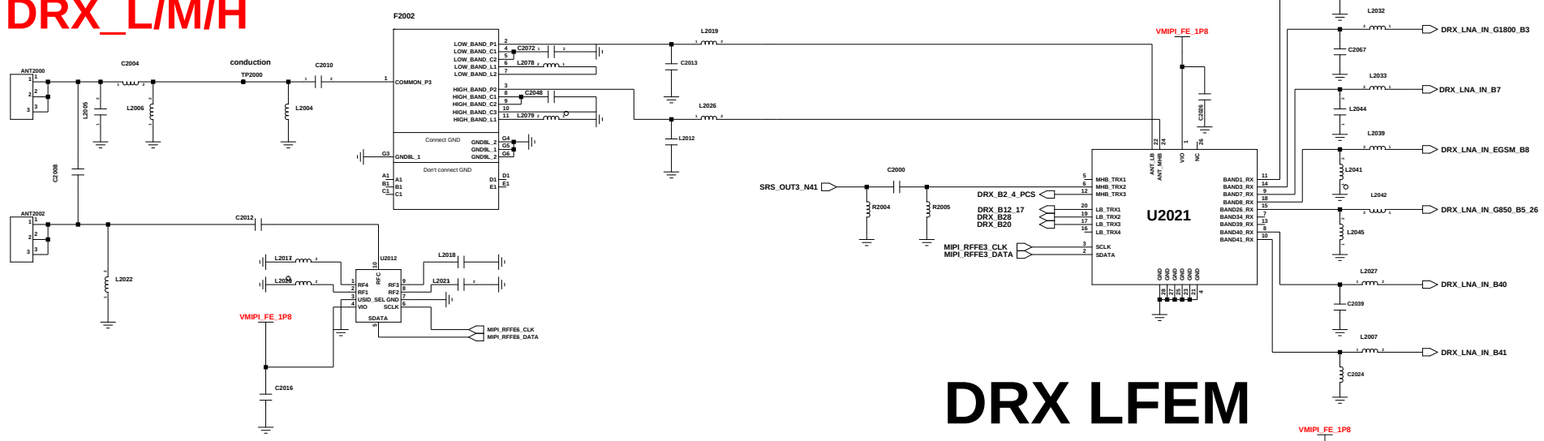

DRX LFEM

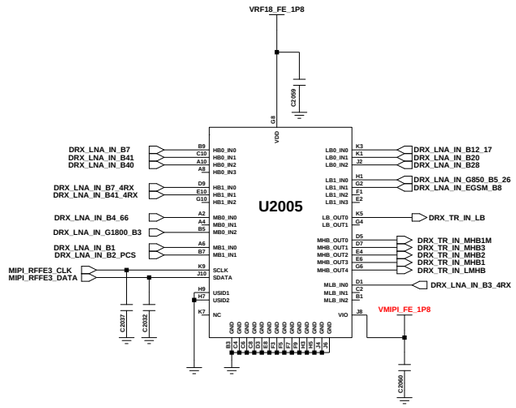

DRX LNA BANK

SUB ANT4

N1/N3 DRX MIMO
N7/N41 PRX MIMO
N77/78 PRX MIMO

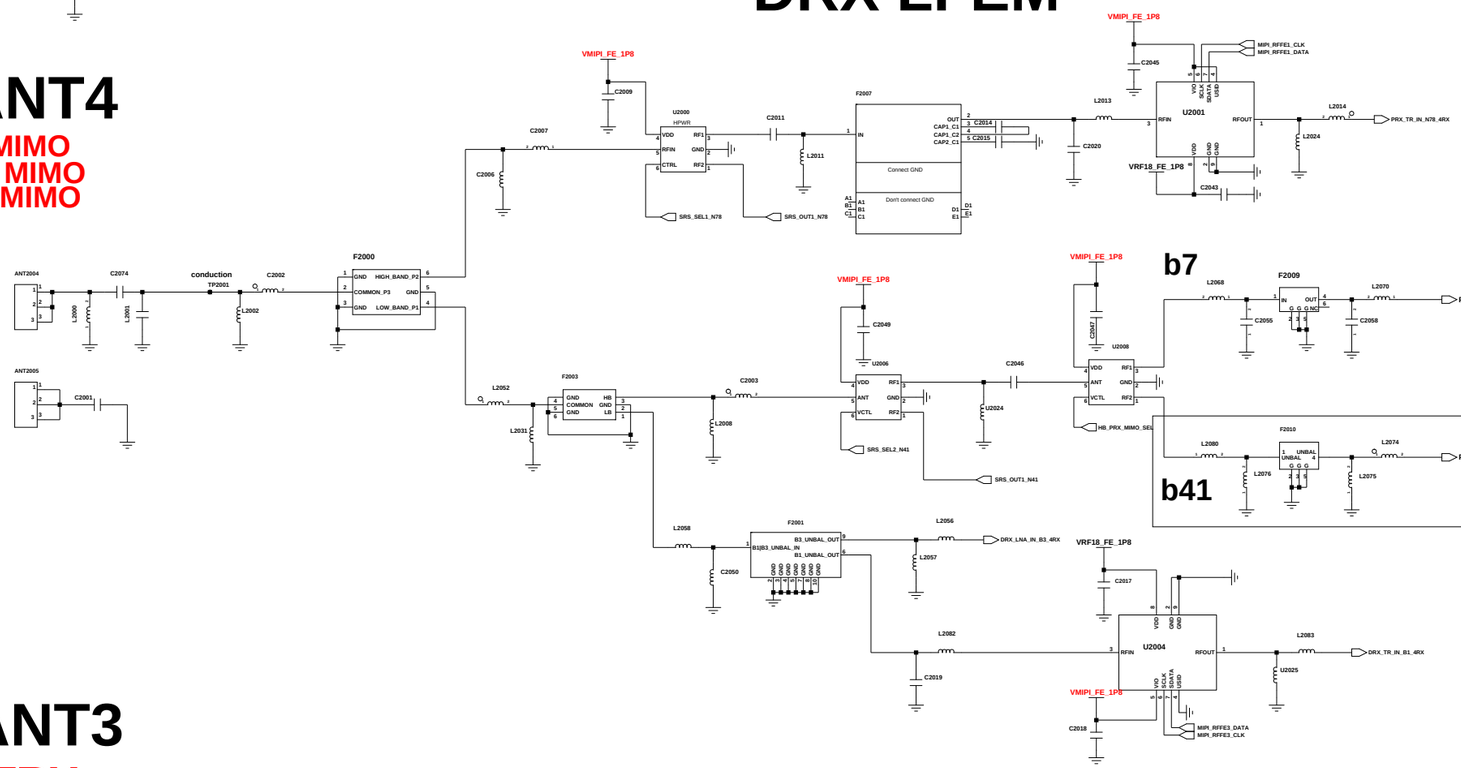

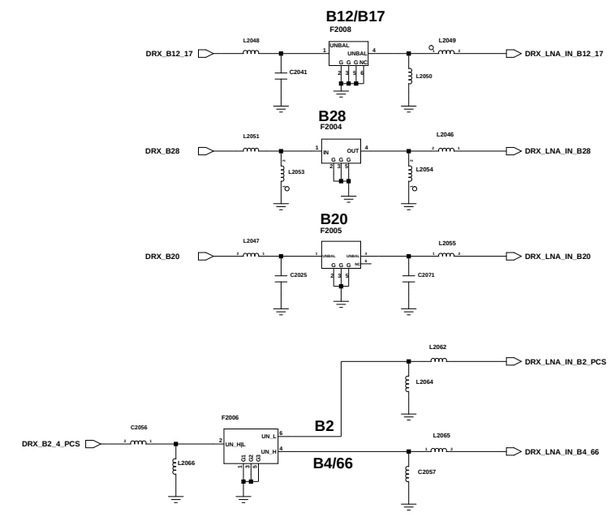

DRX filter

SUB ANT3

N77/78 TRX

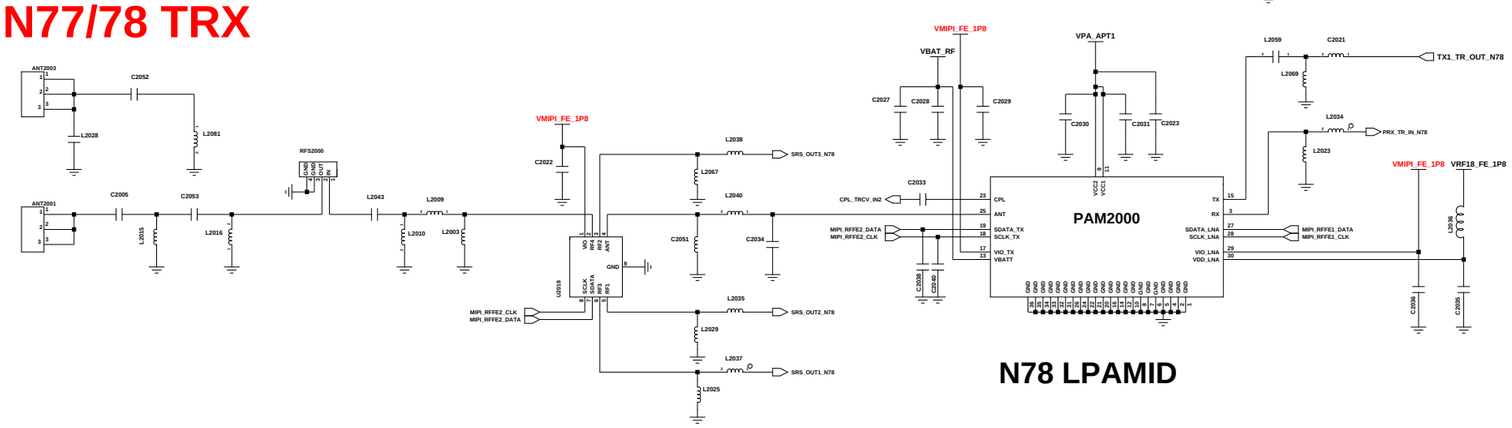

N78 LPAMID

Engineer	DRX
Drawn by:	
R&D CHK:	TITLE:
DOC CTRL CHK:	
MFG ENGR CHK:	
QA CHK:	Drawing Number: 2/7

Changed by: | Date Changed: | Time Changed:

SAMSUNG CONFIDENTIAL
THIS DOCUMENT CONTAINS CONFIDENTIAL
PROPRIETARY INFORMATION THAT IS
SAMSUNG ELECTRONICS CO'S PROPERTY.
DO NOT DISCLOSE TO OR DUPLICATE FOR OTHERS
EXCEPT AS AUTHORIZED BY SAMSUNG.

TRANCEIVER

SUB ANT2

N77/78 DRX MIMO

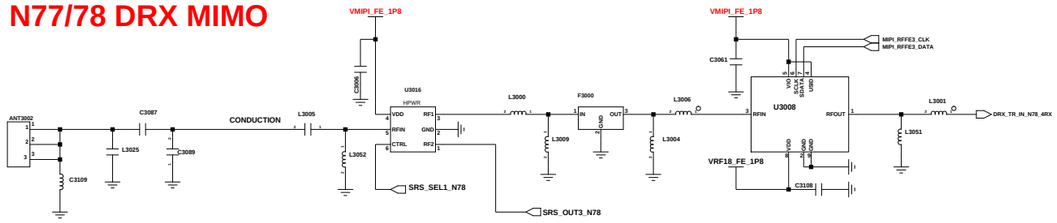

CPL TX1 & TX2

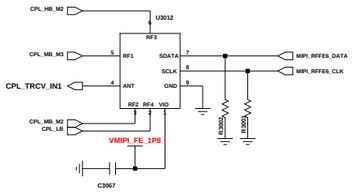

SUB ANT5

N77/78 DRX
N7/N41 DRX MIMO

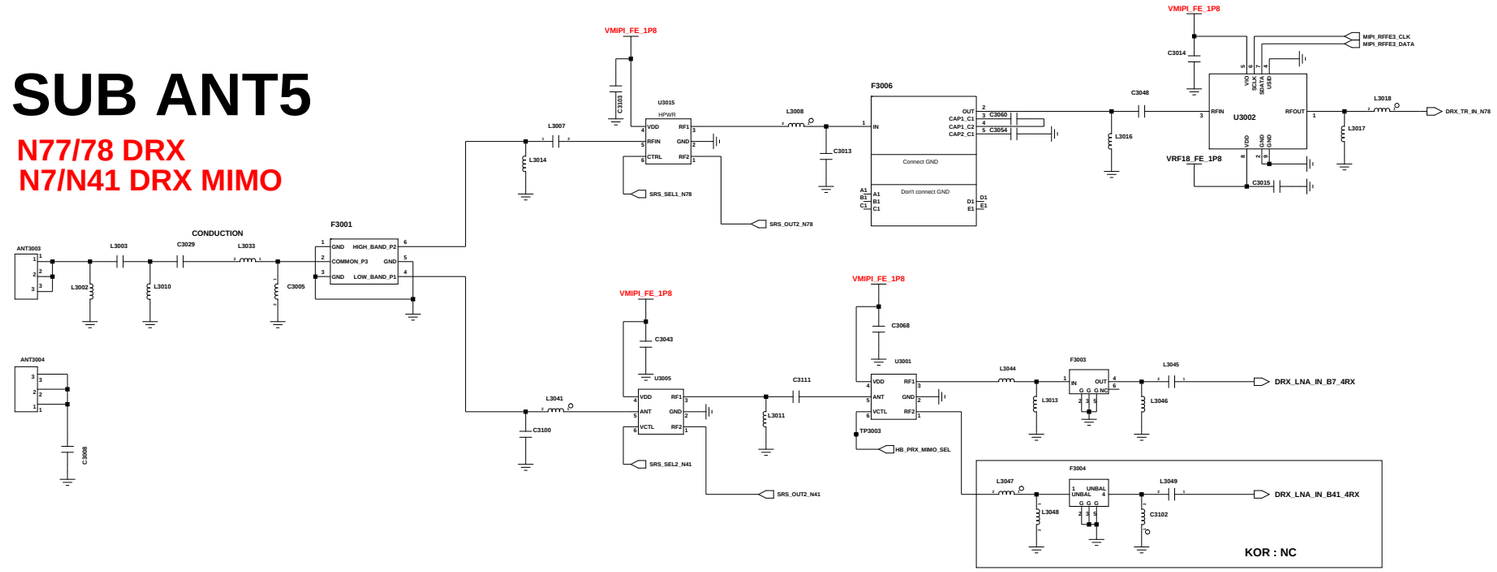

ET MODULATOR

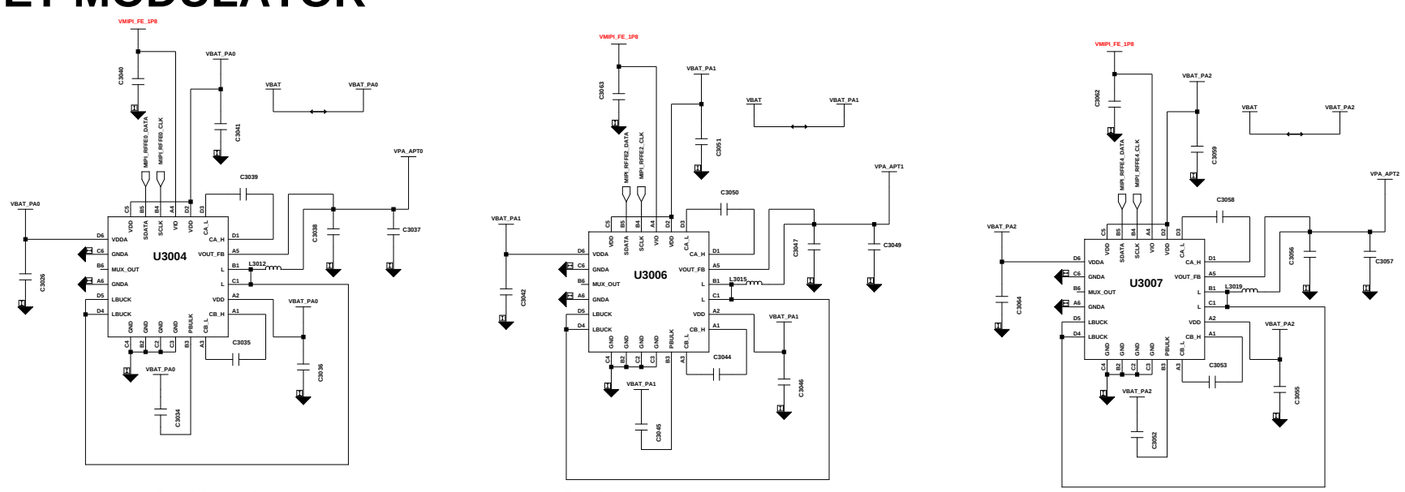

LOW

UHB

M/H

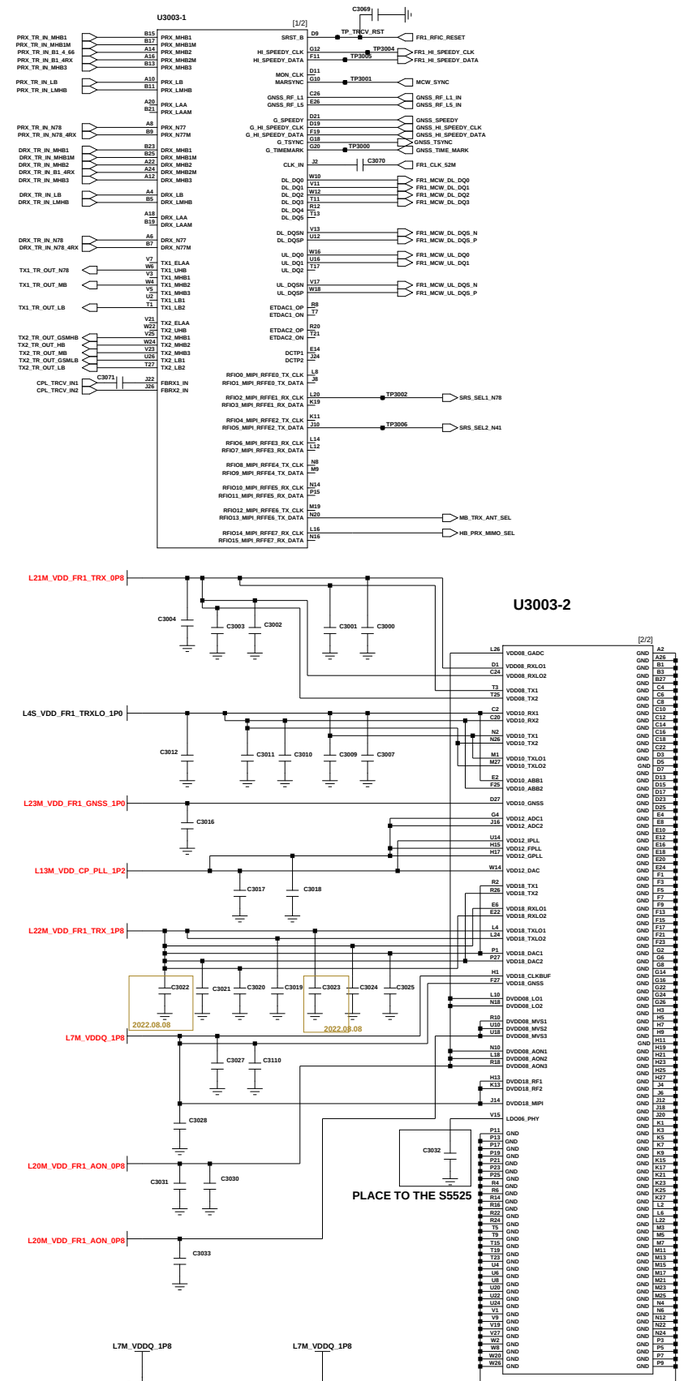

Engineer			
Drawn by:			DRX, TRANCEIVER
R&D CHK:			TITLE: Size:
DOC CTRL CHK:			
MFG ENGR CHK:			
Changed by:	Date Changed:	Time Changed:	QA CHK: Drawing Number 2/7

SAMSUNG CONFIDENTIAL
THIS DOCUMENT CONTAINS CONFIDENTIAL
PROPRIETARY INFORMATION THAT IS
SAMSUNG ELECTRONICS CO'S PROPERTY.
DO NOT DISCLOSE TO OR DUPLICATE FOR OTHERS
EXCEPT AS AUTHORIZED BY SAMSUNG.

BT/WIFI (SUB ANT2)

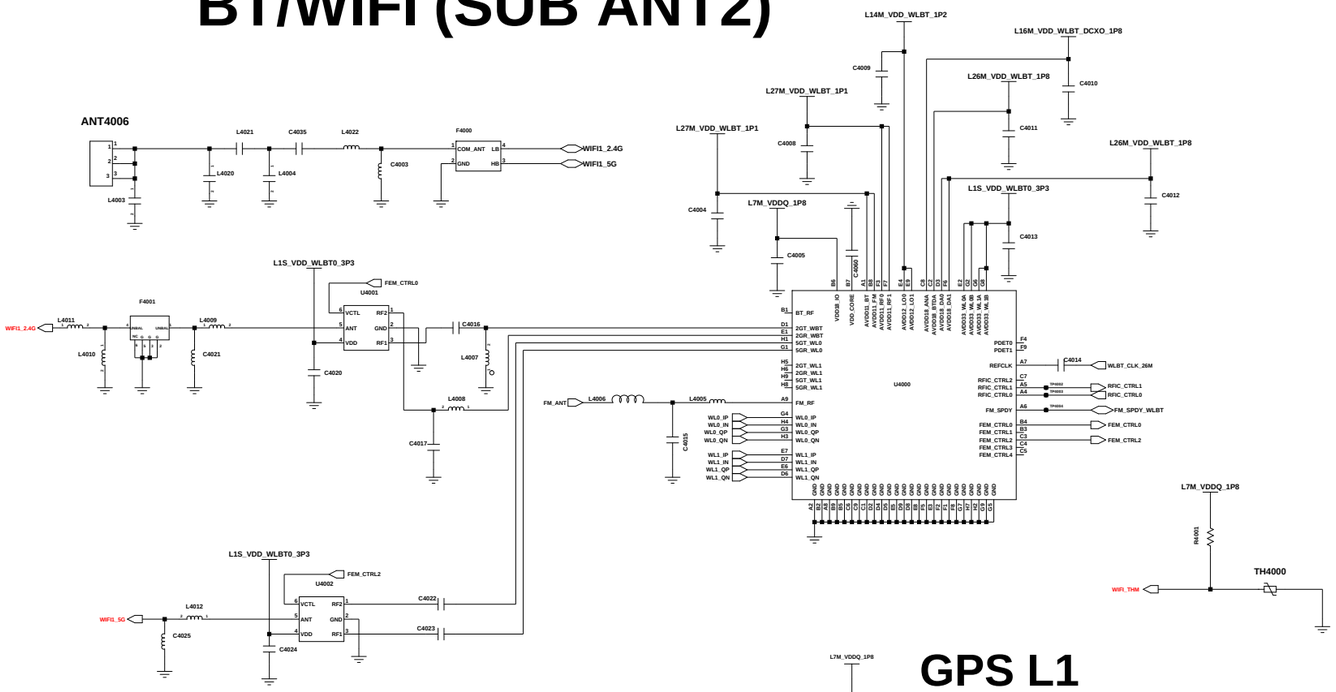

NFC

NFC	NFC PART	Power supply of SIM1		NFC_CHECK:GPIO181 (XGPIO_AP_CP_ALV_3)	
	U4009	R7002	R7003	R6029	R6016
NFC	CONNECT	short	open	10K ohm	open
nonNFC	NC	open	short	open	10K ohm

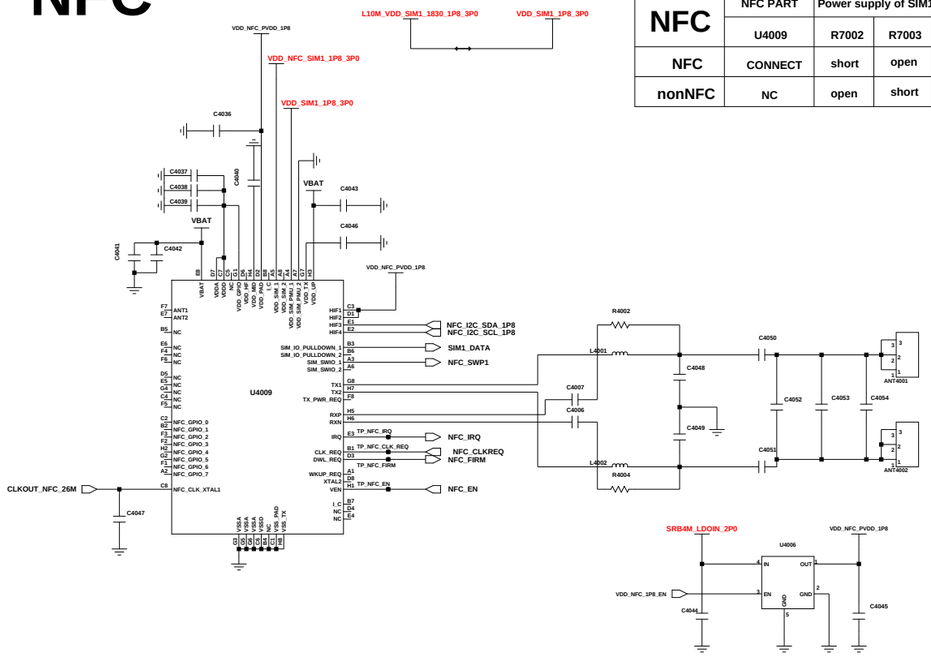

GPS L1

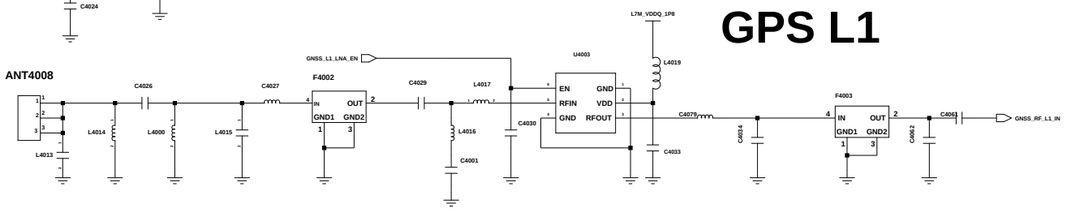

GPS L5

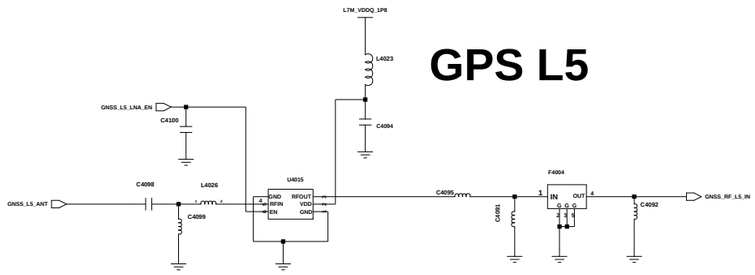

SENSORS

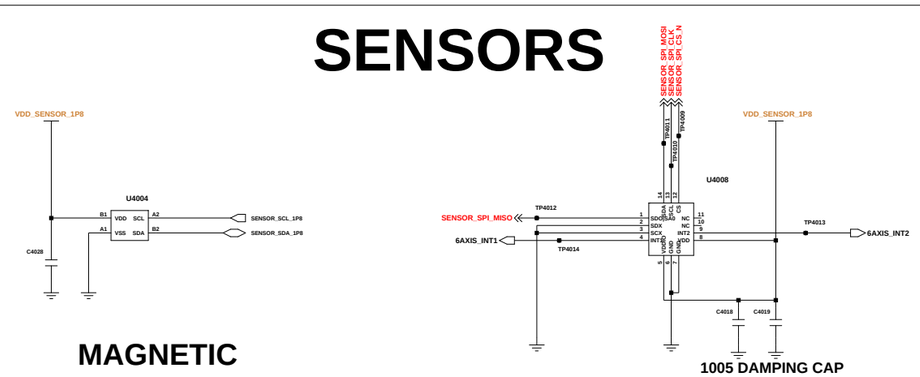

MAGNETIC

6 AXIS(ACC+GRYO)

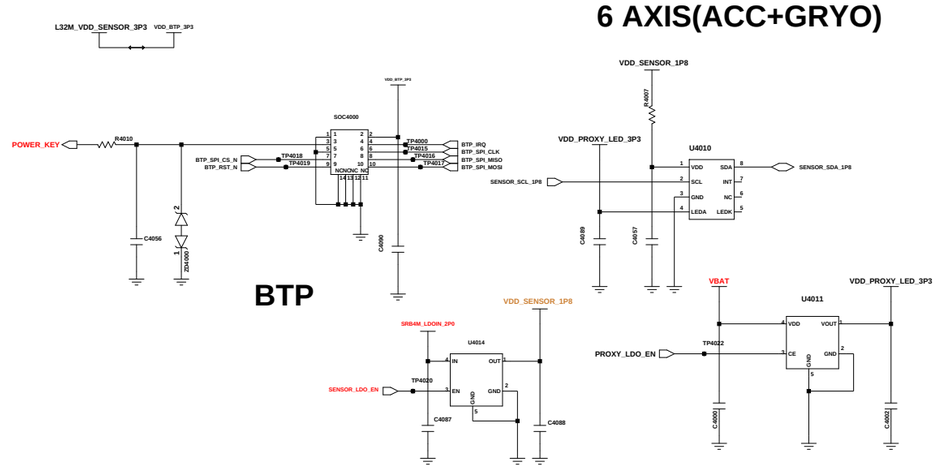

BTP

GRIP SENSOR1

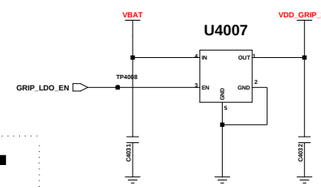

GRIP(SUB) LDO

MST

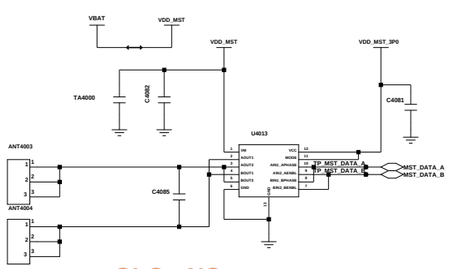

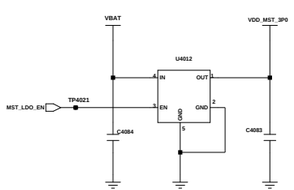

GLO : NC
EUR : NC
KOR : ONLY USE

0.1 delete

Engineer:	SENSOR, WIFI/BT/GPS/NFC
Drawn by:	
R&D CHK:	TITLE:
DOC CTRL CHK:	Size:
MFG ENGR CHK:	

Changed by:	Date Changed:	Time Changed:	QA CHK:	REV	Drawing Number:	Page:
user93						97

SAMSUNG CONFIDENTIAL
THIS DOCUMENT CONTAINS CONFIDENTIAL
AND PROPRIETARY INFORMATION OF
SAMSUNG ELECTRONICS CO'S PROPERTY.
DO NOT DISCLOSE TO OR DUPLICATE FOR OTHERS
EXCEPT AS AUTHORIZED BY SAMSUNG.

RICE

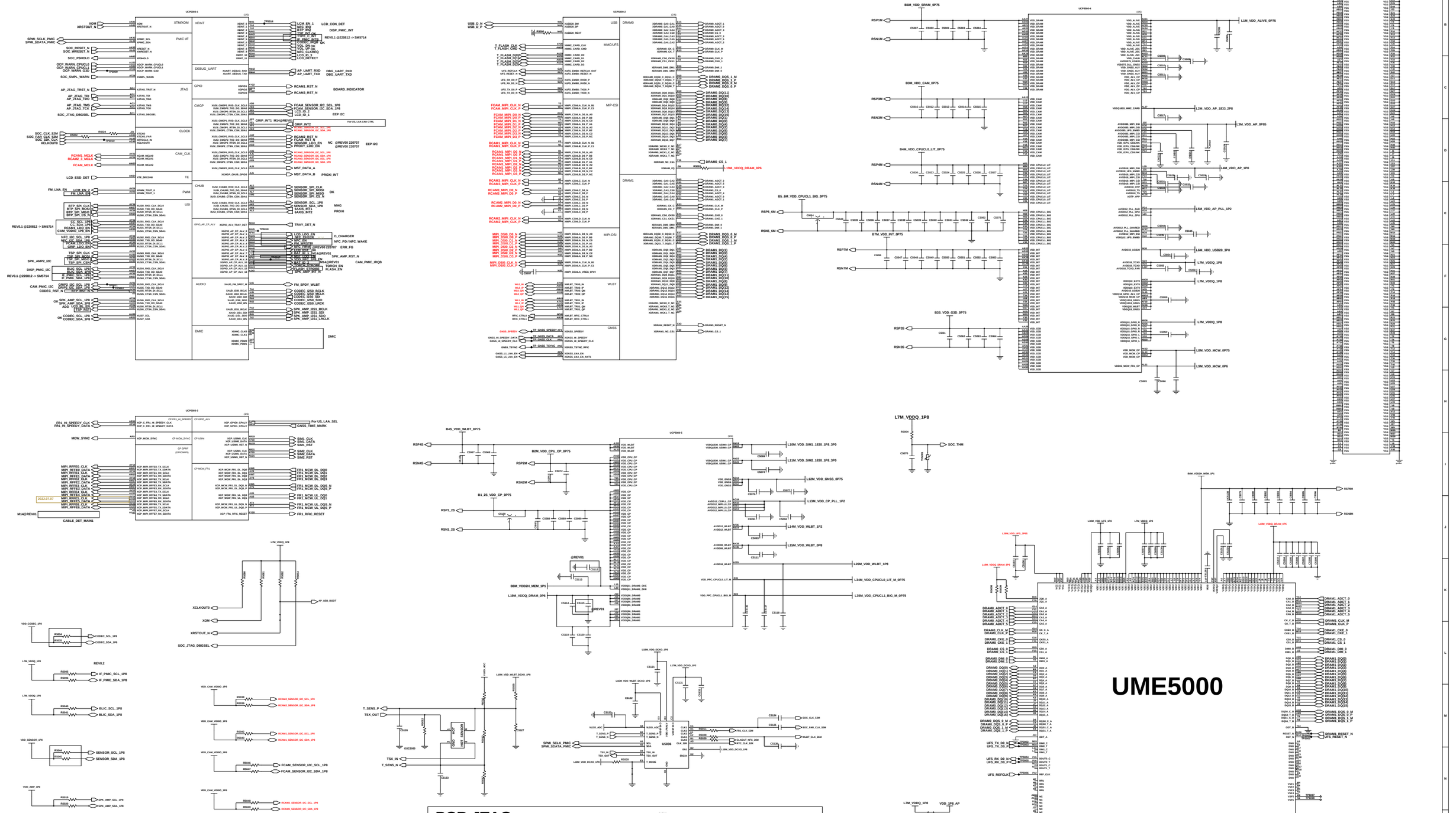

SAMSUNG CONFIDENTIAL
THIS DOCUMENT CONTAINS CONFIDENTIAL PROPRIETARY INFORMATION THAT IS SAMSUNG ELECTRONICS CO'S PROPERTY. DO NOT DISCLOSE TO OR DUPLICATE FOR OTHERS EXCEPT AS AUTHORIZED BY SAMSUNG.

PMIC

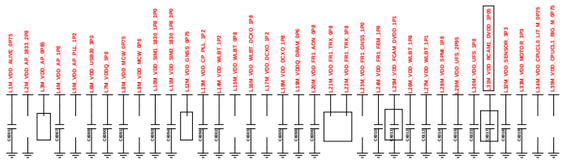

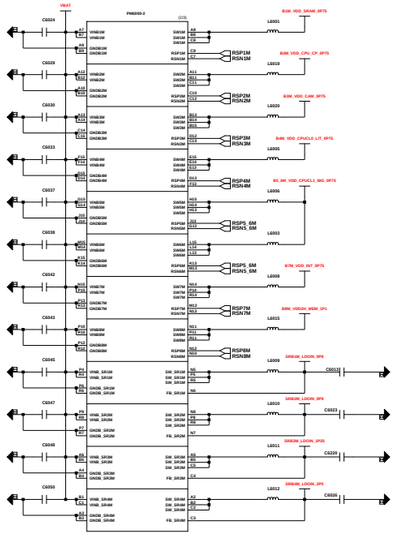

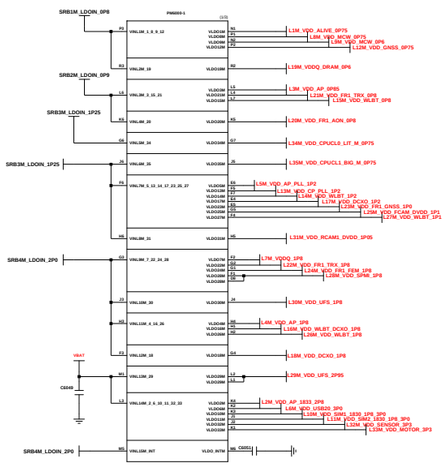

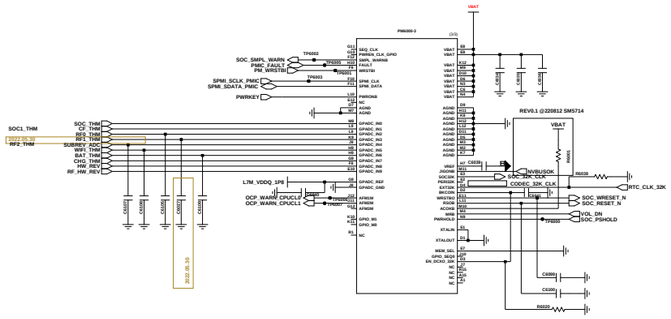

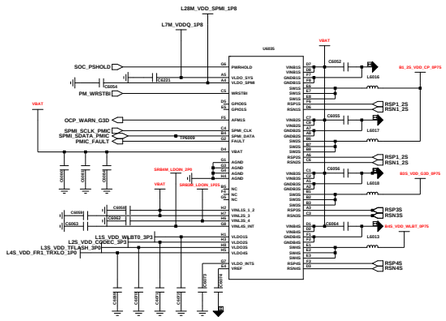

REV	R1(Kohm)	R2(Kohm)	PCB	
0	NC	0	REV0.0	pre0PV
1	430	30	REV0.1	PV1
2	390	62		
3	360	91	REV0.2A	PV2
4	330	120		
5	300	150		
6	270	180		
7	240	220		
8	200	240		
9	180	270		
10	150	300		

AP HW REV R03

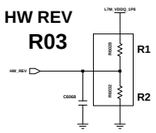

CP HW REV R03

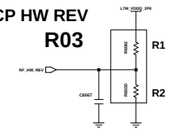

NFC CHECK

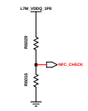

IF PMIC

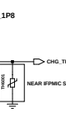

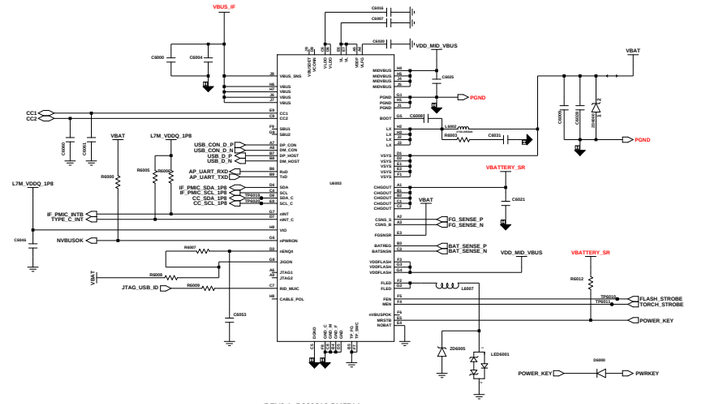

DIRECT CHARGER

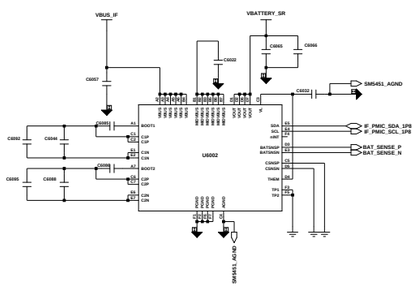

VOLUME KEY

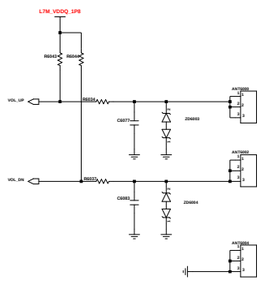

BATTERY CON

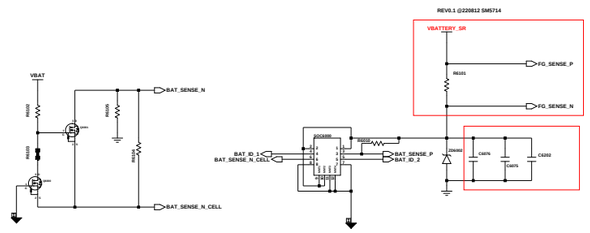

OVP

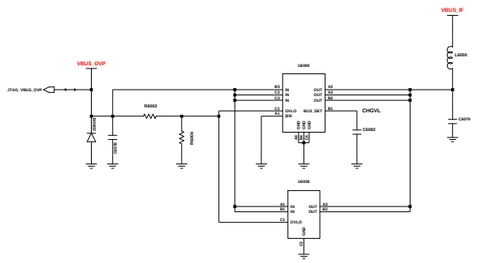

Engineer:	PMIC/IF PMIC
Drawn by:	
R&D CHK:	TITLE:
DOC CTRL CHK:	
MFG ENGR CHK:	
Q/A CHK:	SIZE / Drawing Number: / Page 1p1

Changed by: | Date Changed: | Time Changed:

SAMSUNG CONFIDENTIAL
THIS DOCUMENT CONTAINS CONFIDENTIAL
PROPRIETARY INFORMATION THAT IS
SAMSUNG ELECTRONICS CO'S PROPERTY.
DO NOT DISCLOSE TO OR DUPLICATE FOR OTHERS
EXCEPT AS AUTHORIZED BY SAMSUNG.

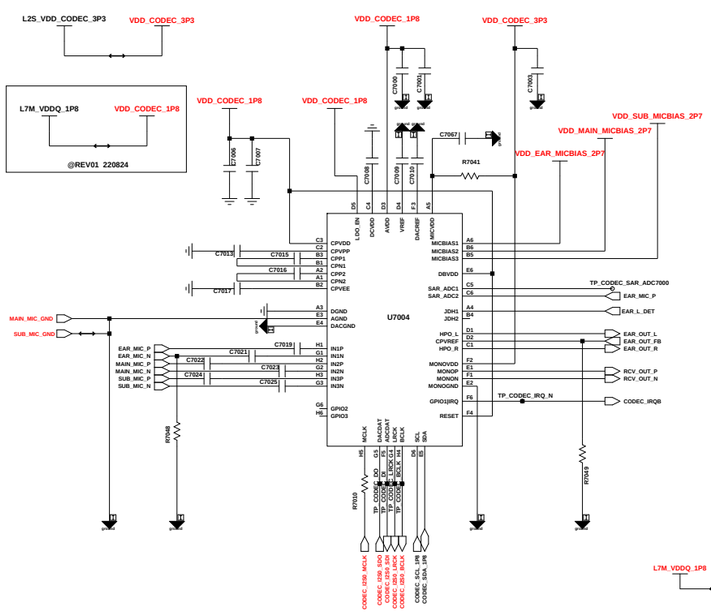

RCV CONTACT

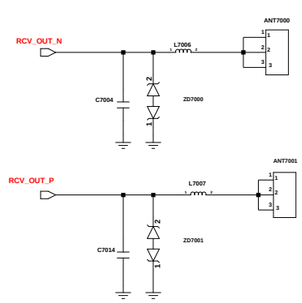

EAR MIC

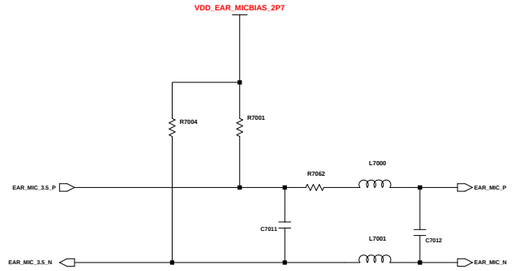

SUB MIC

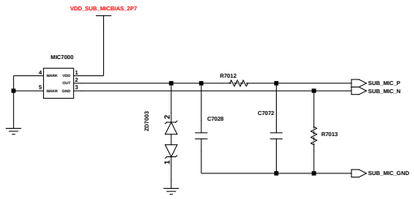

MAIN MIC

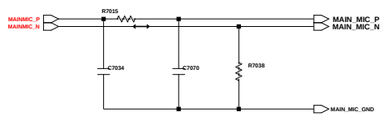

NEAR TO CODEC
GND_ISOLATION

SPK AMP

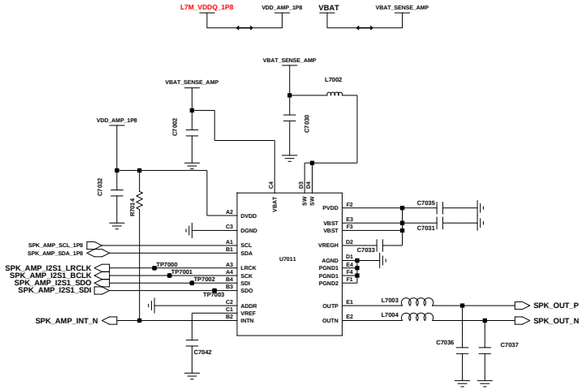

SIM / T-FLASH (3in3)

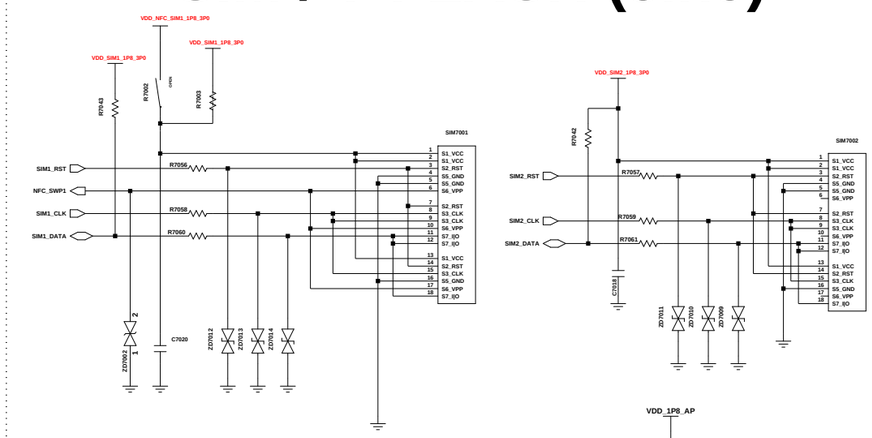

SIM7000

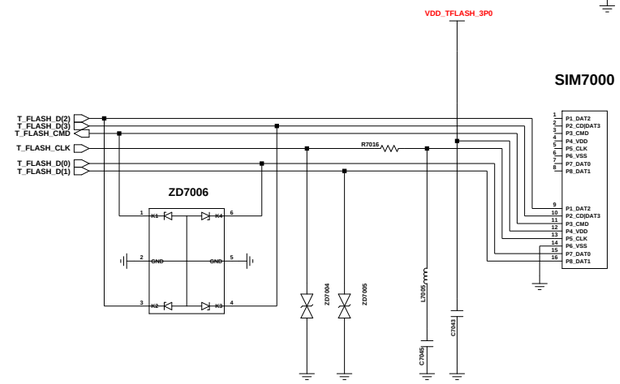

SUB

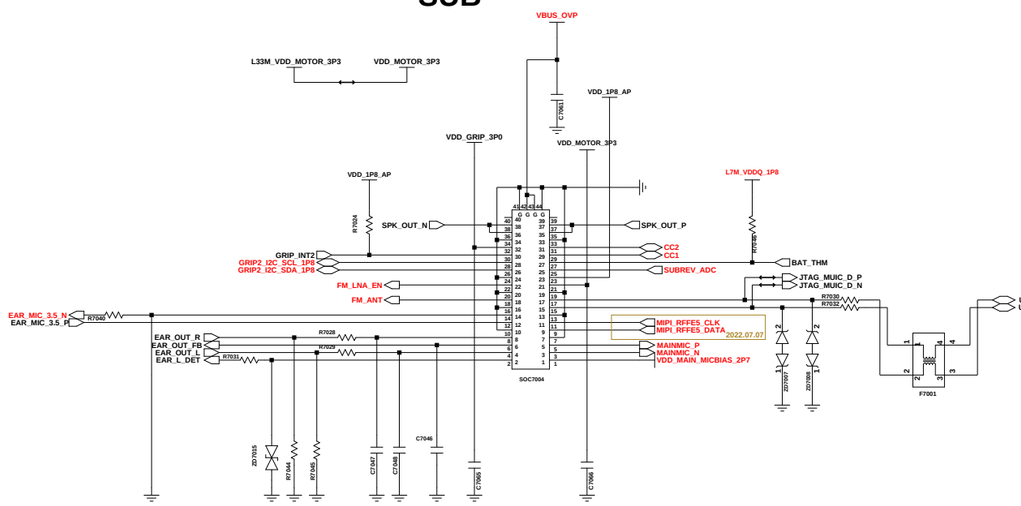

LCD

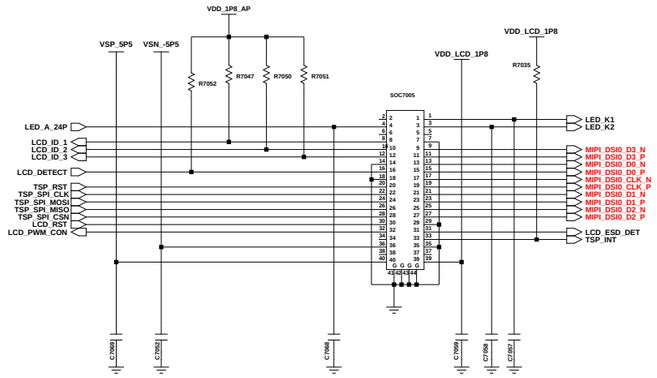

SHIELD CAN

BOTH HOLE

BOTH7000

2D BARCODE

CON7000
CON7001

LCD CONTACT

GAS7000
GAS7002

FRONT CONTACT

GAS7001
GAS7003

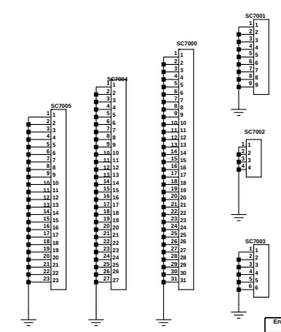

Engineer:			
Drawn by:	AUDIO, SIM/SD, SHIELD CAN		
R&D CHK:	TITLE:		Size:
DOC CTRL CHK:			
MFG ENGR CHK:			
QA CHK:	REV	Drawing Number:	Page:6/7

Changed by:	Date Changed:	Time Changed:

SAMSUNG CONFIDENTIAL
THIS DOCUMENT CONTAINS CONFIDENTIAL PROPRIETARY INFORMATION THAT IS SAMSUNG ELECTRONICS CO'S PROPERTY. DO NOT DISCLOSE TO OR DUPLICATE FOR OTHERS EXCEPT AS AUTHORIZED BY SAMSUNG.

CAMERA_PART

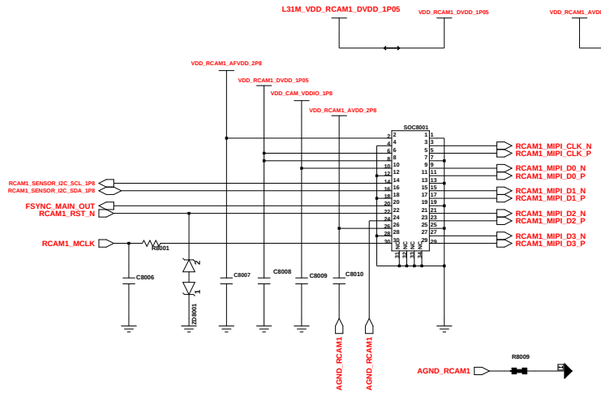

RCAM1_50M(30PIN)

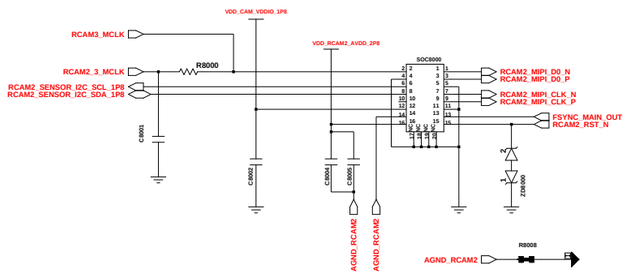

RCAM2_2M BOKEH CAMERA(16PIN)

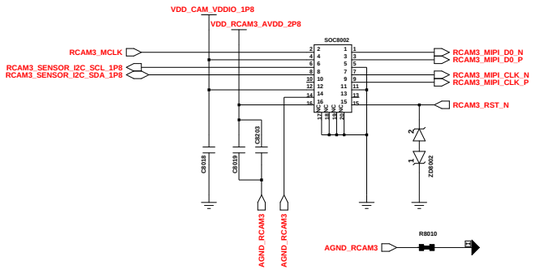

RCAM3_2M MACRO CAMERA(16PIN)

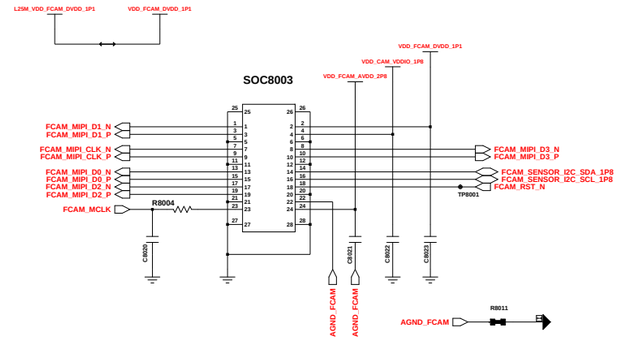

FCAM_13M(24PIN)

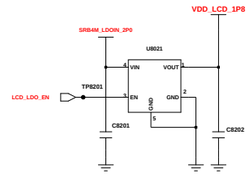

DISPLAY PMIC

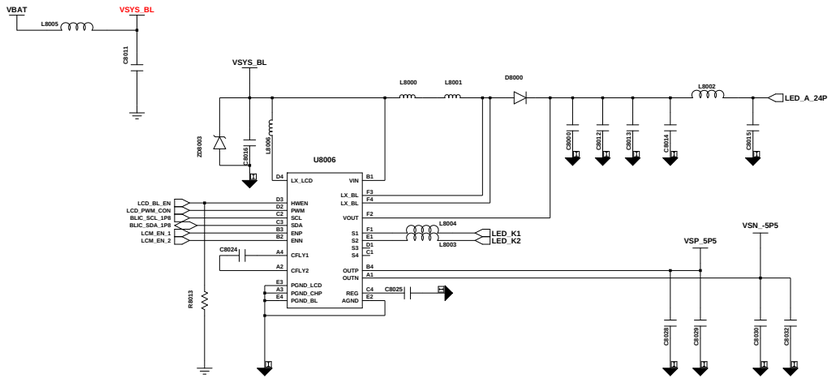

CAM PMIC

RCAM1

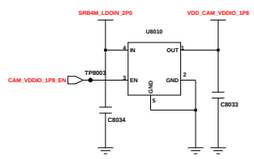

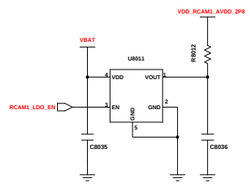

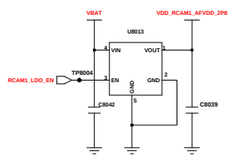

RCAM2/3

FCAM

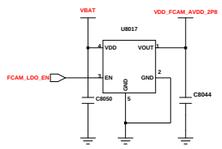

Engineer:			
Drawn by:			CAMERA, DISPLAY
R&D CHK:			TITLE: Size:
DOC CTRL CHK:			
MFG ENGR CHK:			
Changed by:	Date Changed:	Time Changed:	QA CHK: REV: Drawing Number: Page: 7/7

SM-M146B

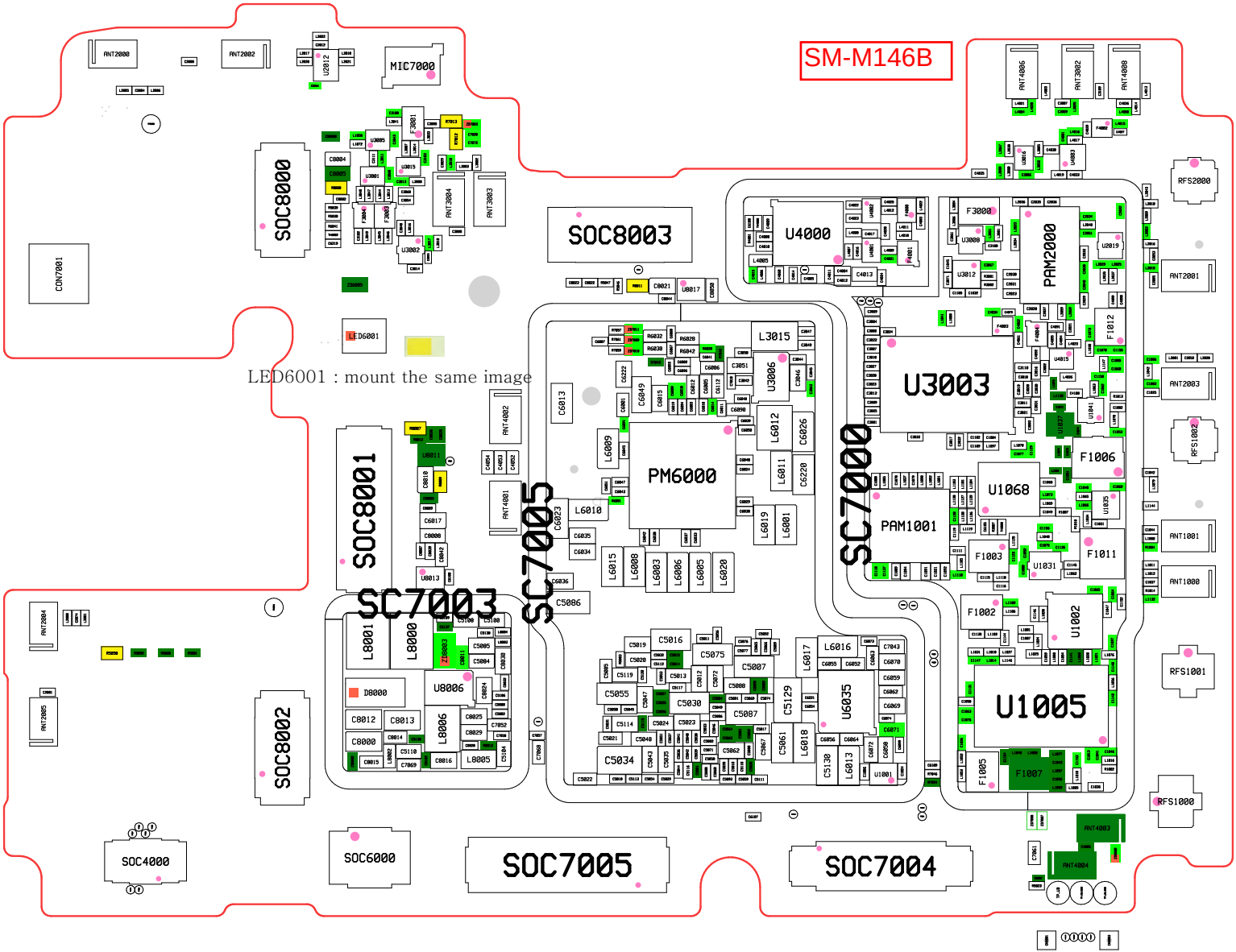

LED6001 : mount the same image

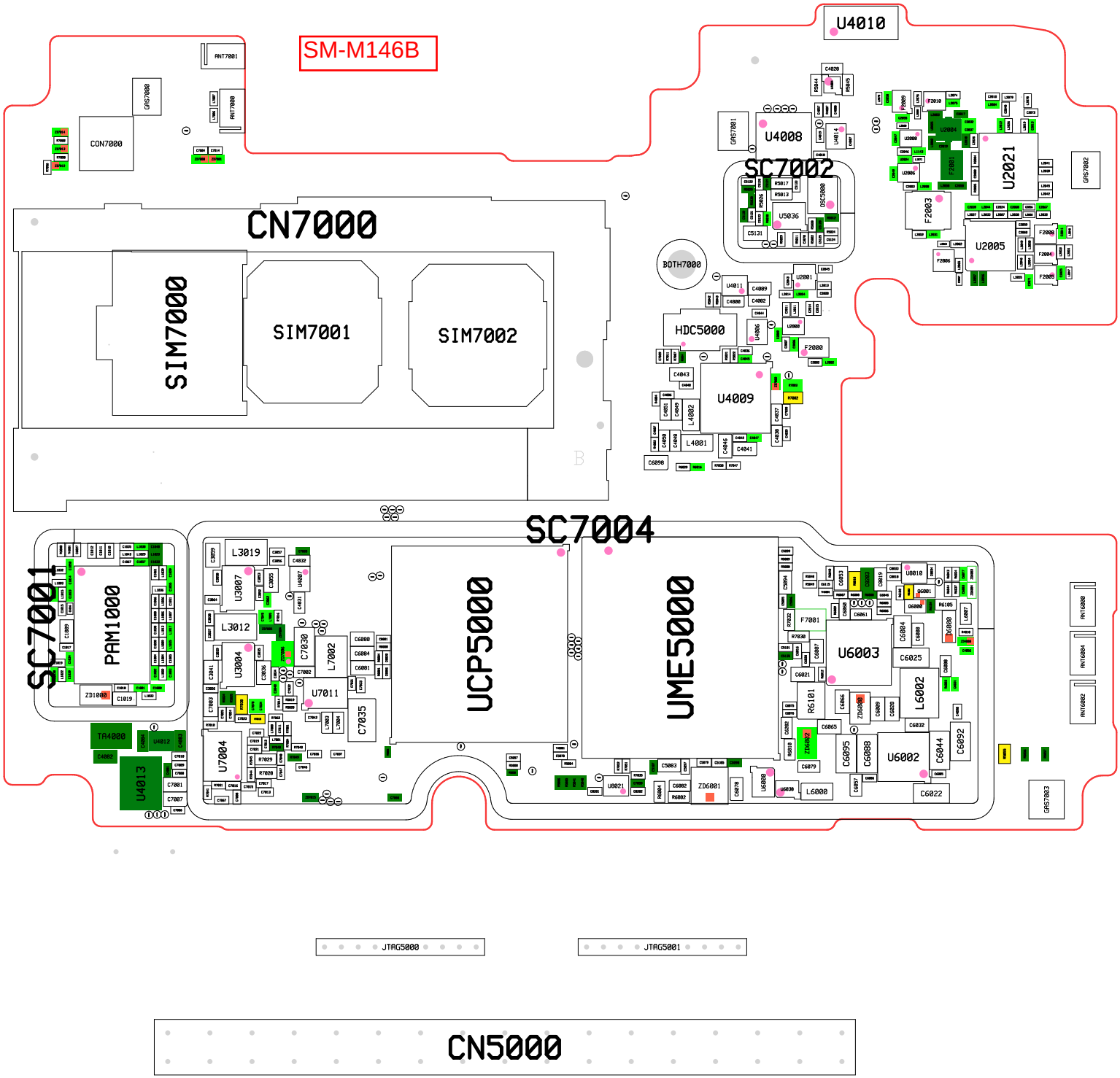
SM-M146B
U4010
ANT7001
GRS7000
ANT7000
CON7000
GRS7001
U4008
SC7002
U5036
C5131
U2021
U2005
F2003
GRS7002
CN7000
SIM7000
SIM7001
SIM7002
BOTH7000
HDC5000
U4009
L4001
L4002
SC7004
SC7001
PAM1000
UCP5000
UME5000
U6003
L6002
U6002
R6101
F7001
L3019
L3012
U3007
U3004
U7004
U7011
C7030
L7002
C7035
TA4000
U4013
U4012
ANT6000
ANT6004
ANT6002
GRS7003
JTAG5000
JTAG5001
CN5000

SM-M146B

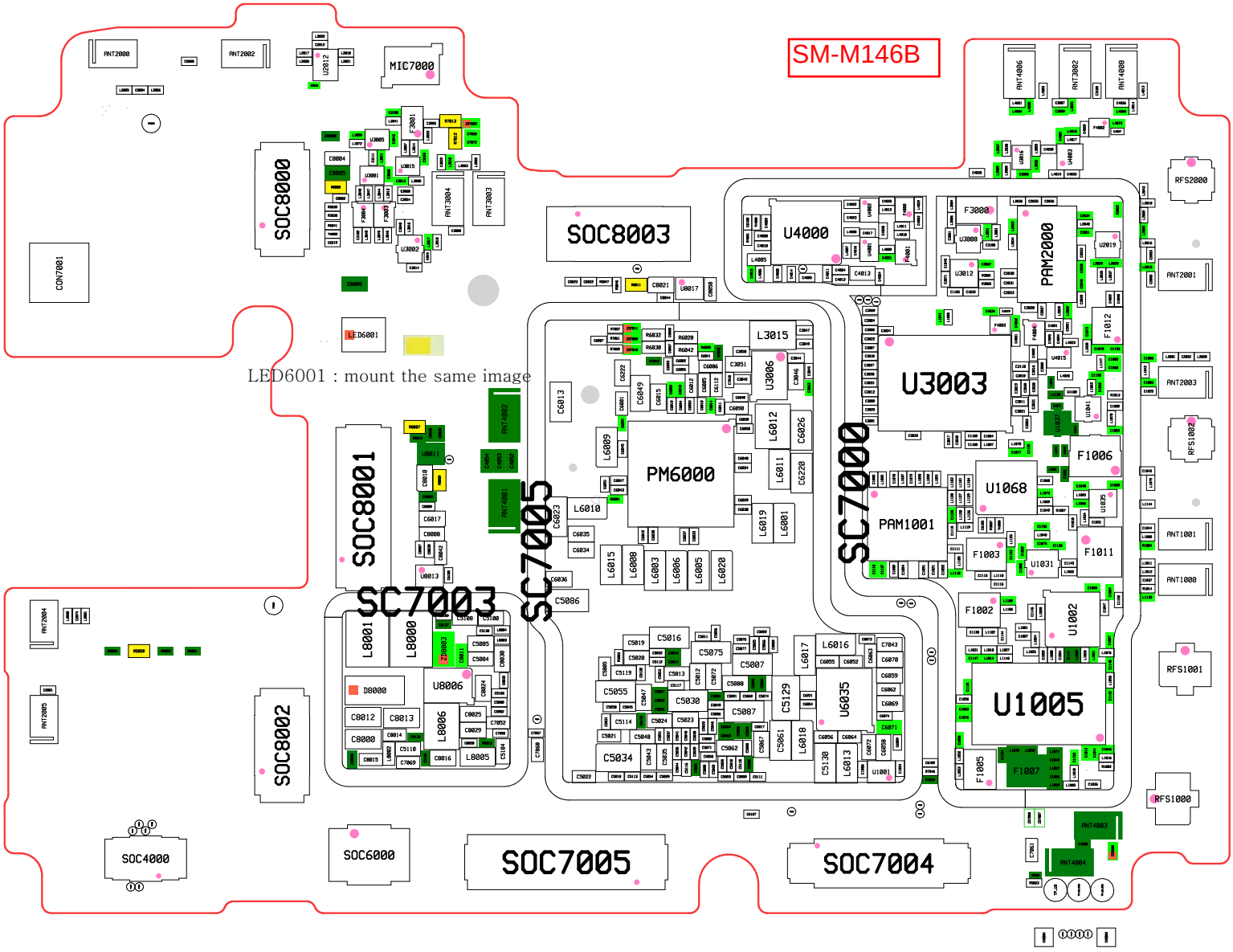
ANT2000
ANT2002
U2012
MIC7000
SOC8000
CON7001
LED6001
ANT3004
ANT3003
SOC8003
U4000
F3000
PAM2000
U3012
U2019
F1012
U3003
ANT4006
ANT3002
ANT4008
RFS2000
ANT2001
ANT2003
RFS1002
ANT1001
ANT1000
RFS1001
RFS1000
LED6001 : mount the same image
ANT4002
ANT4001
SOC8001
SC7005
PM6000
L3015
U3006
L6012
C6026
L6011
C6220
L6009
L6010
L6019
L6001
L6015
L6008
L6003
L6006
L6005
L6020
SC7000
PAM1001
U1068
F1006
F1003
U1031
F1011
F1002
U1002
U1005
F1005
F1007
SC7003
L8001
L8000
U8006
D8000
L8006
L8005
SOC8002
U6035
L6016
L6017
L6018
L6013
C5129
C5061
C5130
U1001
SOC4000
SOC6000
SOC7005
SOC7004
ANT4003
ANT4004
ANT2004
ANT2005

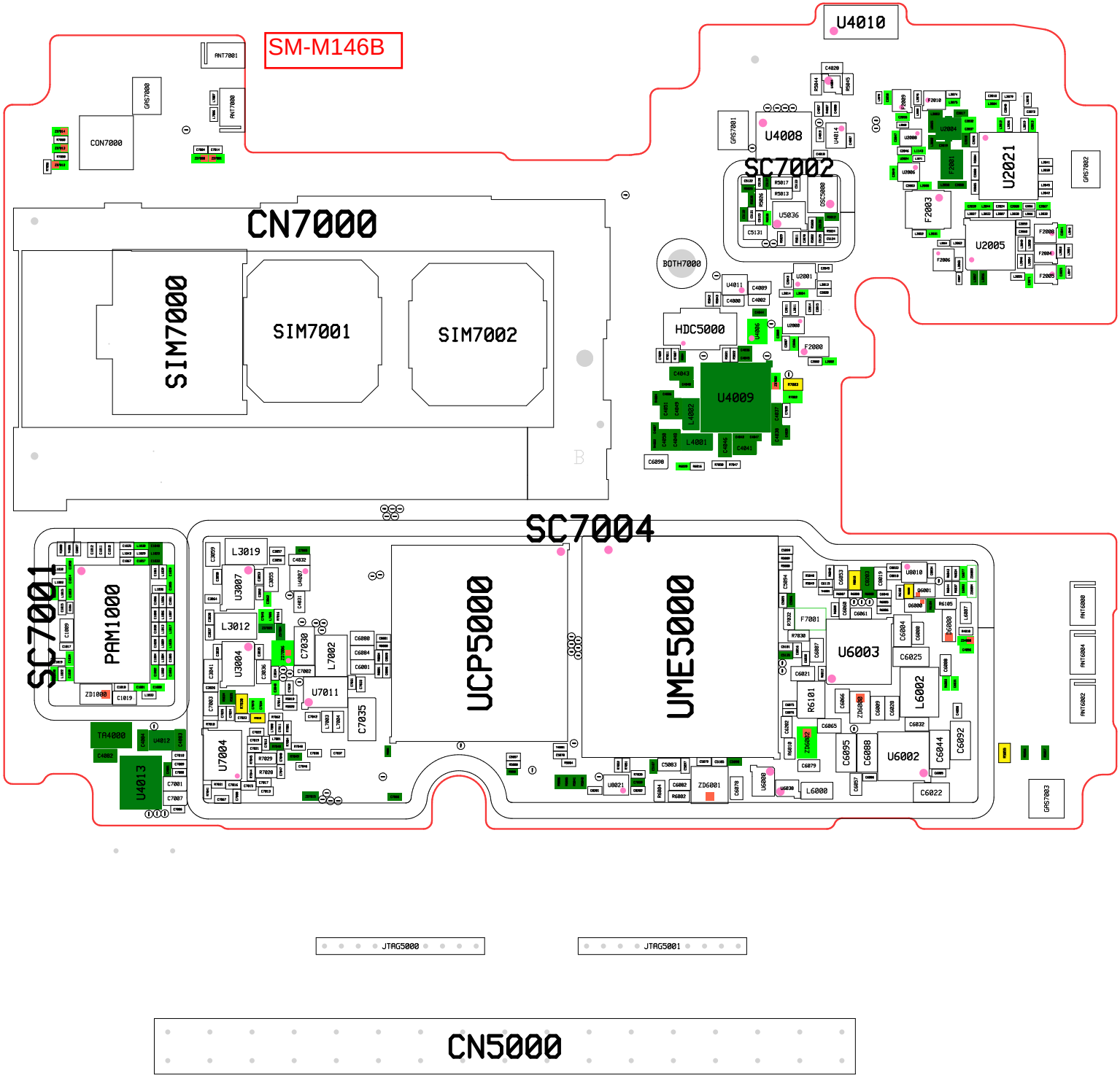
SM-M146B
U4010
ANT7001
GRS7000
CON7000
ANT7000
CN7000
SIM7000
SIM7001
SIM7002
GRS7001
U4008
SC7002
U5036
OSC5000
C5131
BOTH7000
U4011
C4089
C4000
C4002
U2001
HDC5000
U4005
F2000
U4009
L4002
L4001
C4041
C6890
U2021
U2084
F2001
F2003
U2005
F2006
F2008
F2004
F2005
GRS7002
SC7004
SC7001
PAM1000
ZD1000
C1019
TA4000
U4013
U4012
C4082
C7001
C7007
L3019
U3007
L3012
U3004
U7004
C7030
L7002
U7011
C7035
UCP5000
UME5000
U6010
Q6001
R6105
F7001
U6003
C6025
L6002
R6101
ZD6002
C6865
C6832
C6095
C6088
U6002
C6044
C6092
C6022
L6000
U8021
ZD6001
C6870
L6008
U6030
GRS7003
ANT6000
ANT6004
ANT6002
JTAG5000
JTAG5001
CN5000

SM-M146B

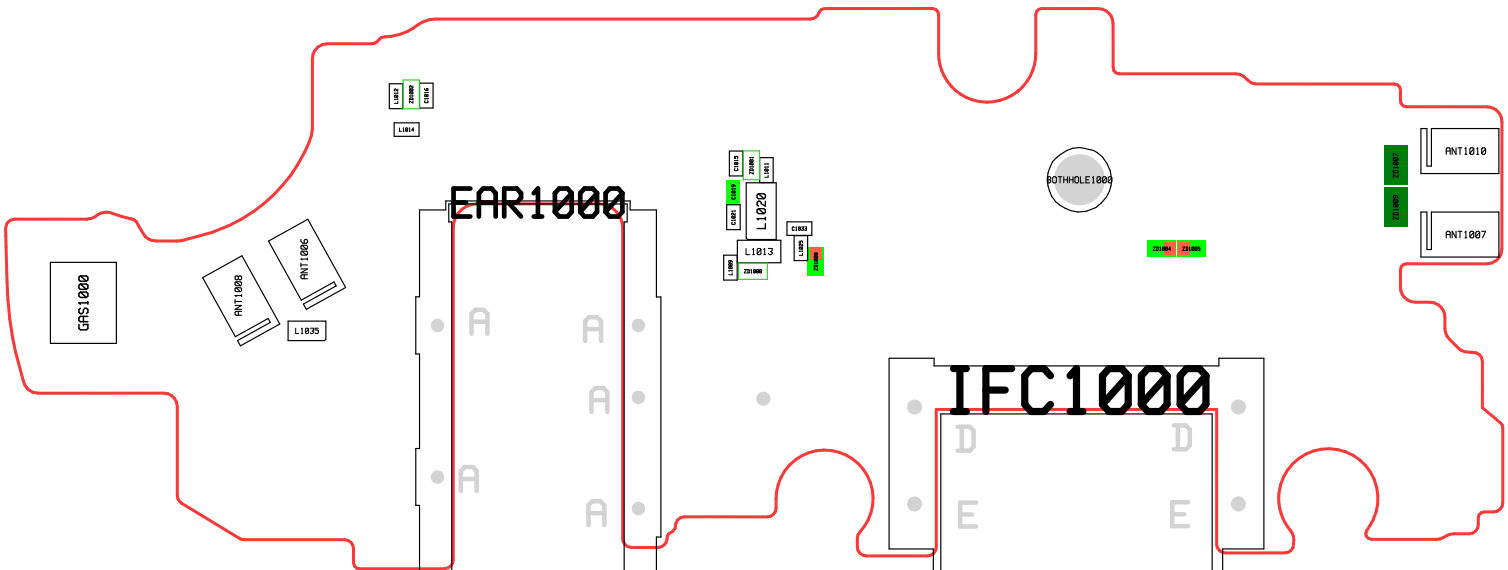
L1017
ZD1000
C1016
L1014
EAR1000
C1012
ZD1002
L1001
C1009
C1001
L1020
L1013
C1003
L1005
L1003
ZD1003
ZD1000
BOTHOLE1000
ZD1004
ZD1005
ZD1007
ZD1006
ANT1010
ANT1007
GAS1000
ANT1008
ANT1006
L1035
A
A
A
A
A
IFC1000
D
D
E
E

SM-M146B

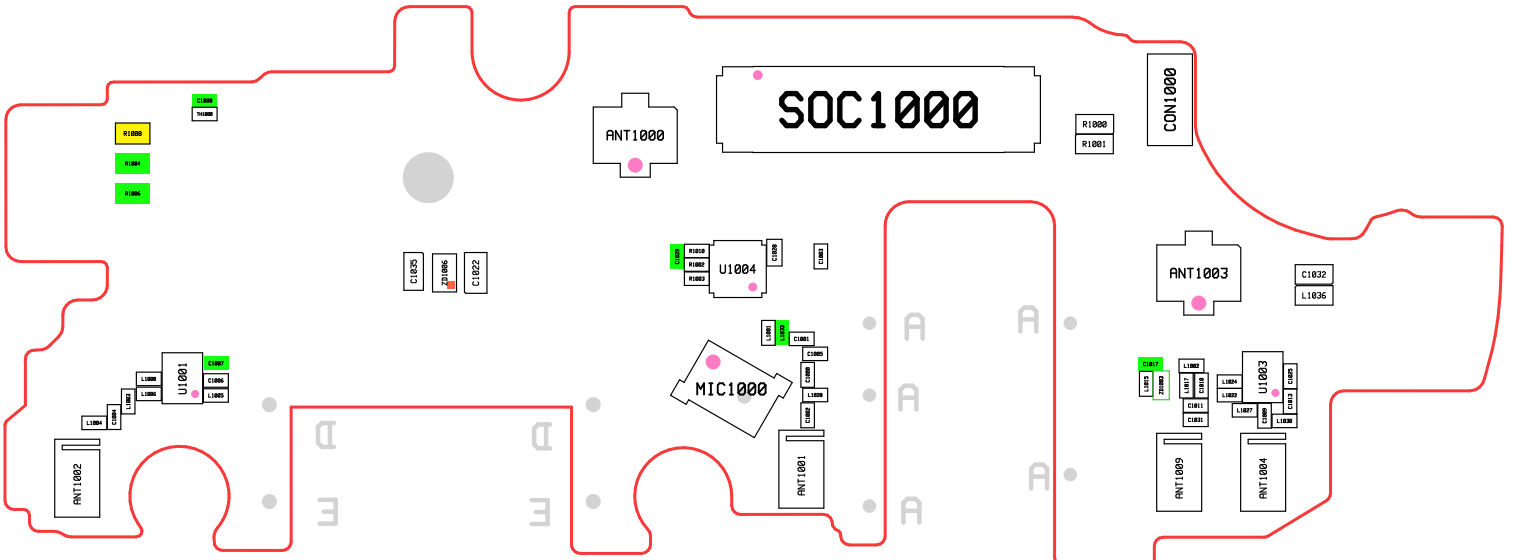
SOC1000
ANT1000
CON1000
R1000
R1001
U1004
ANT1003
C1032
L1036
C1025
C1022
U1001
ANT1002
MIC1000
ANT1001
U1003
ANT1009
ANT1004

SM-M146B

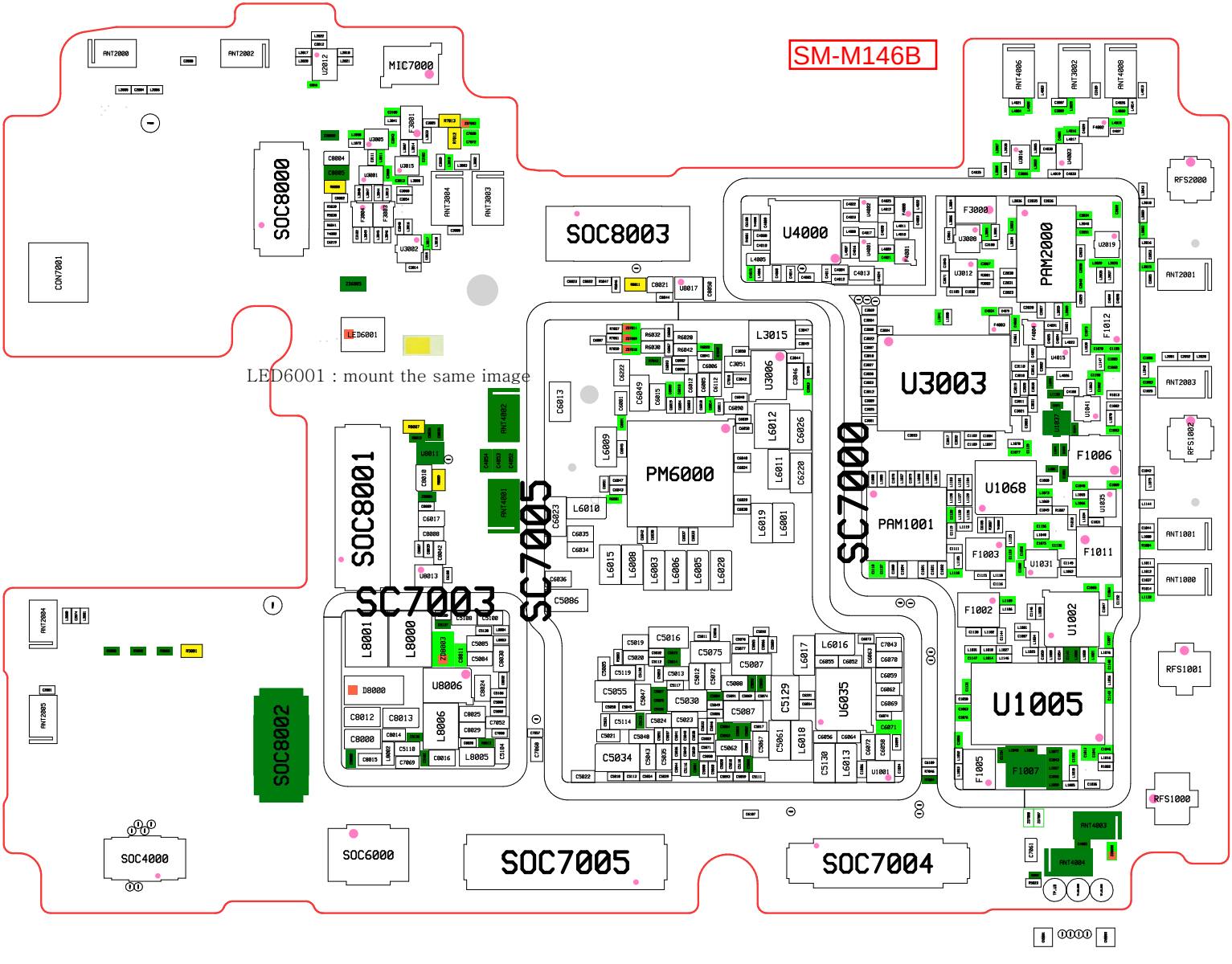

LED6001 : mount the same image

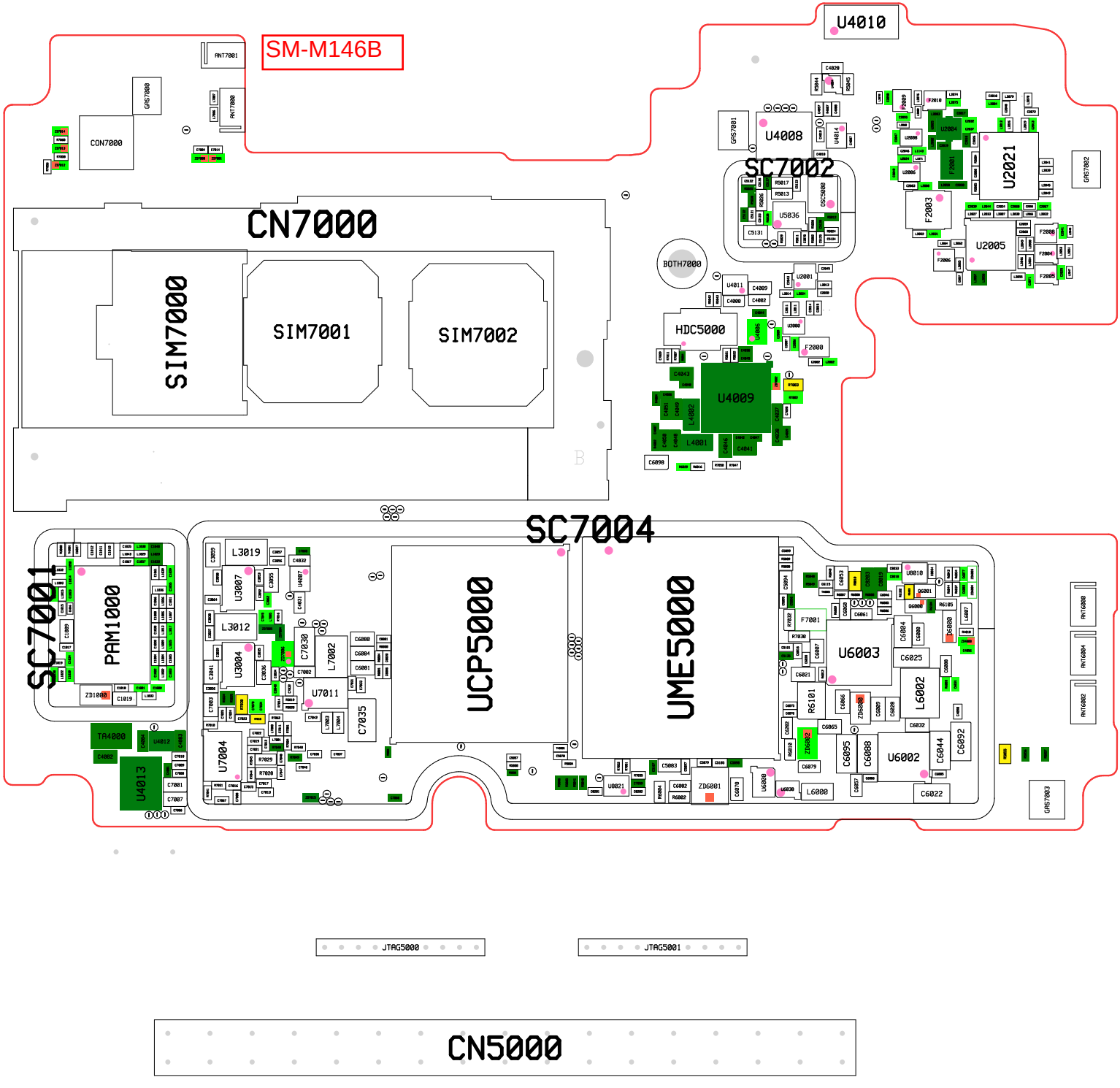
SM-M146B
U4010
ANT7001
GRS7000
ANT7000
CON7000
U4008
GRS7001
SC7002
U5036
OSC5000
U2021
U2005
F2003
GRS7002
CN7000
SIM7000
SIM7001
SIM7002
BOTH7000
HDC5000
U4009
L4001
L4002
SC7004
SC7001
PAM1000
UCP5000
UME5000
U3019
U3007
L3012
U3004
U7004
U7011
L7002
C7030
C7035
U6003
L6002
U6002
R6101
F7001
L6000
U4013
TA4000
U4012
ZD1000
ANT6000
ANT6004
ANT6002
GRS7003
JTAG5000
JTAG5001
CN5000

SM-M146B

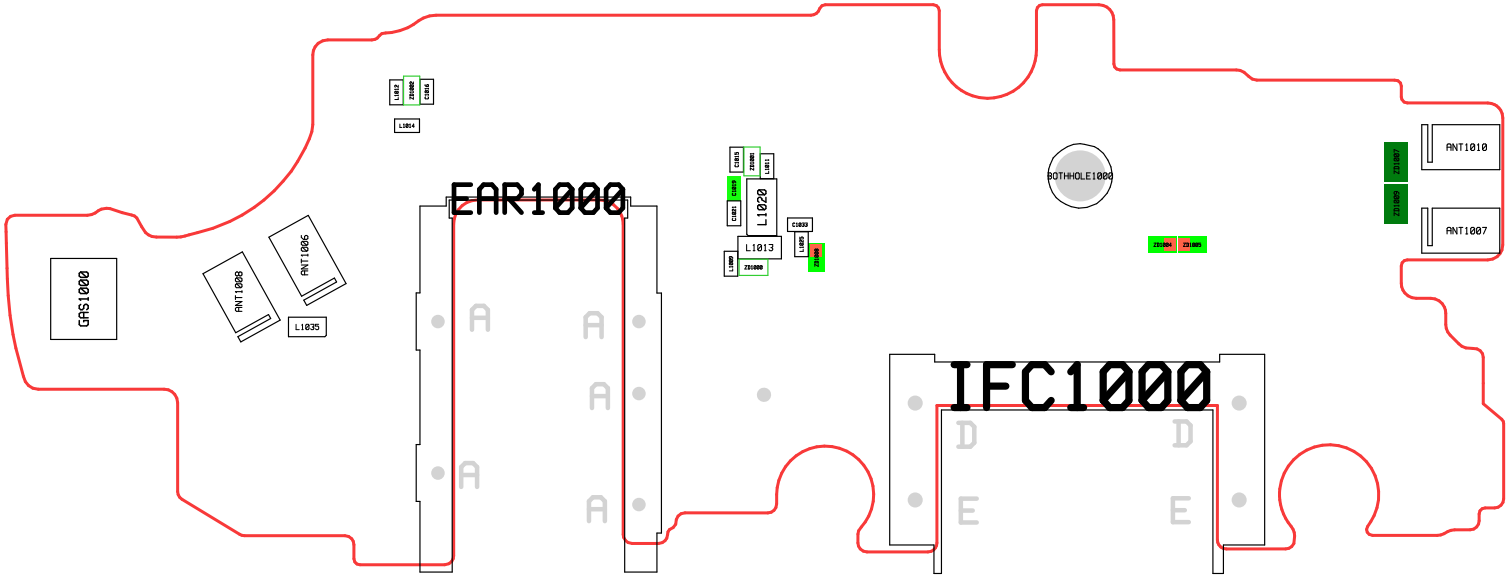
EAR1000
IFC1000
GAS1000
ANT1008
ANT1006
L1035
L1014
L1020
L1013
BOTHOLE1000
ANT1010
ANT1007
A
D
E

SM-M146B

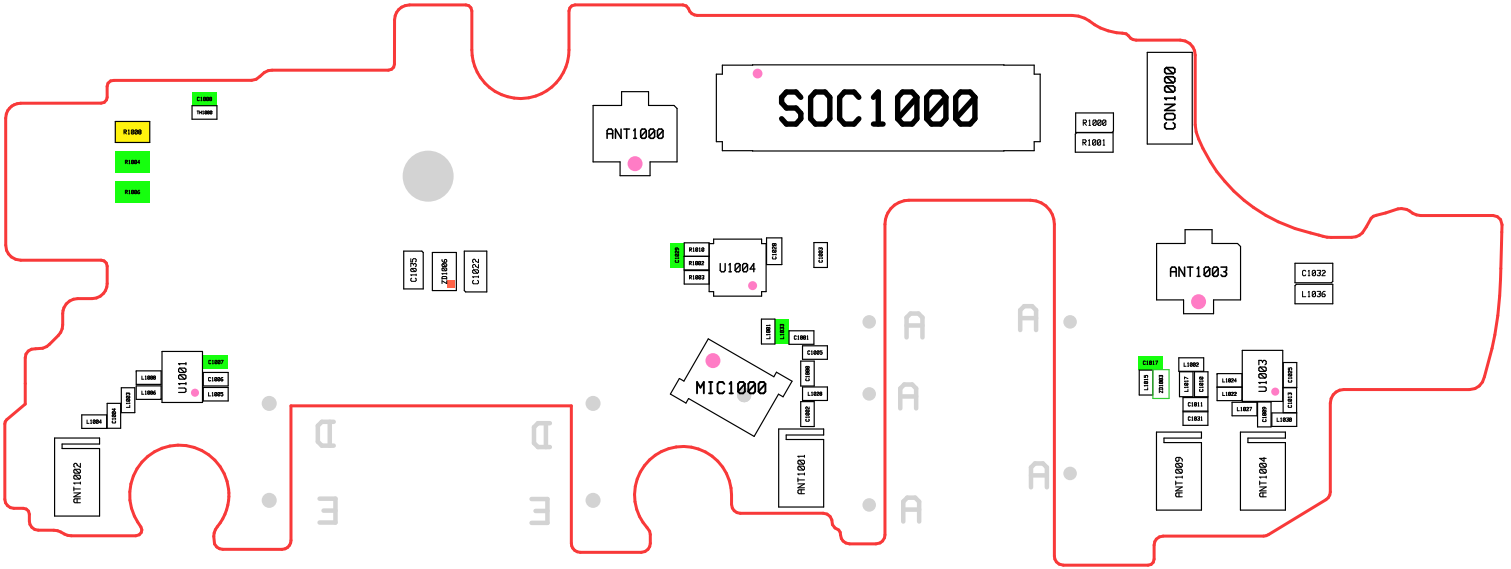
SOC1000
ANT1000
CON1000
R1000
R1001
R1004
R1006
C1025
FB1006
C1022
U1004
R1010
R1002
R1003
C1028
C1030
ANT1003
C1032
L1036
U1001
C1007
C1006
L1005
L1008
L1002
L1006
C1004
L1004
ANT1002
MIC1000
L1001
L1003
C1001
C1005
C1008
L1009
C1010
ANT1001
C1017
L1013
FB1002
U1003
L1002
L1007
C1018
L1024
L1022
L1027
C1011
C1031
C1025
C1023
C1029
L1030
ANT1009
ANT1004